Model APS-997C

Installation Manual

SELECTABLE FEATURES

The selectable features can be set manually as explained below, or with the RF feature programmer.
To set features using the RF programmer, follow the instructions packaged with the programmer.
Factory default settings are indicated by bold text.

NOTE : The method of manual override can either be selected to operate from the valet switch or operate as custom code.
Be certain to place a check mark indicating the method used in the box located on the last page of the owner's manual.

NOTE: Keyless Entry Models with no horn output will Flash the Parking Lights instead of chirp where chirp is indicated.
Also, No data will be indicated if a feature is not available for a particular model. The unit will enter the feature but no selection will be available.

RF Programmable Feature Bank 1 Is For Transmitter Programming See Transmitter Programming Guide.

RF Programmable Features Bank 2 Is Alarm Selectable Features:

Feature Selection	1 Chirp	2 Chirps	3 Chirps	4 Chirps	5 Chirps	6 Chirps
1st DoorL/UL	**1 Sec.**	3.5 Sec.	1 Sec L, Dbl. U/L	Dbl L, 1 Sec UL	Dbl L, Dbl UL	1 S l/350mS ul
2nd Accy Lock	Auto Lock On	**Auto Lock Off**				
3rd Accy. UL	Auto UL Dr.	Auto UL All	**Auto UL Off**			
4th Headlights	On Arm	On Disarm	**On Both**	Off		
5th Passive Locks	Passive	**Active**				
6th Pass/Act Arm	Passive Arm	**Active Arm**				
7th Siren/Horn	**Siren/Horn**	Siren Only	Horn Only			
8th Horn Chirp	10mS	**16mS**	30mS	40mS	50mS	
9th O/R Method	Custom Code	**Valet**				
10th 2 Step U/L	On	**Off**				
11th Chp Del Tx	On	**Off**				
12th Volts/HdWire	Not Available					
13th Trigger Circuits	**All On**	Doors Off	Hood/Trunk Off	All Off		
14th L/UL Poll	Not Available					
15th Aux Ch 5 Sel	**Pulse**	Push & Hold	10 Sec	20 Sec	Latch On/Off	Hold 3/S For O/P
16th Aux Ch 6 Sel	**Pulse**	Push & Hold	10 Sec	20 Sec	Latch On/Off	Hold 3/S For O/P
17th Aux Ch 7 Sel	**Pulse**	Push & Hold	10 Sec	20 Sec	Latch On/Off	Hold 3/S For O/P
18th Trigger Delay	**Not Available**					

When using the RF programmer, enter the program mode as follows:

Turn the ignition on

Press and release valet switch 3 times

turn ignition off then on

Press and hold valet switch for 5 seconds

Siren chirps 2 times indicating access to RF feature program mode.

To program these selectable features;

	Action	System Response
	Turn ignition on	No response
	Press and release the valet switch 3 times	1 Chirp - LED 1 flash
	Within 3 seconds, turn ignition Off Then On	Short chirp, then long chirp
	This Action Accesses Feature Bank 2 Alarm	Selectable Features
First	Press and release the valet switch 1 time	1 chirp = 1 second door lock & unlock
	Press transmitter Lock button to change	2 chirps = 3.5 second door lock & Unlock
	Press transmitter Lock button to change	3 chirps = 1 sec. lock, dbl 1 sec. unlock
	Press transmitter Lock button to change	4 chirps = dbl 1 sec lock, 1 sec unlock
	Press transmitter Lock button to change	5 chirps = dbl 1 sec lock, dbl 1 sec unlock
	Press transmitter Lock button to change	6 chirps = 350mS unlock. 1 sec lock
	or	
Second	Press and release the valet switch	2 chirps = auto locks off
	Press transmitter Lock button to change	1 chirp = auto locks on
	or	
Third	Press and release the valet switch	3 chirps = auto unlock off
	Press transmitter Lock button to change	1 chirp = auto unlock drivers door only
	Press transmitter Lock button to change	2 chirps = auto unlock all doors
	or	
Fourth	Press and release the valet switch	Non Functional On This Unit
	or	
Fifth	Press and release the valet switch	2 chirps = active locks
	Press transmitter Lock button to change	1 chirp = passive locks
	or	
Sixth	Press and release the valet switch	2 chirps = active arming
	Press transmitter Lock button to change	1 chirp = passive arming
	or	
Seventh	Press and release the valet switch	1 chirp = siren and horn output
	Press transmitter Lock button to change	2 chirps = siren output only
	Press transmitter Lock button to change	3 chirps = horn output only
	or	
Eighth	Press and release the valet switch	2 chirps = horn chirp output 16mS
	Press transmitter Lock button to change	3 chirps = horn chirp output 30mS
	Press transmitter Lock button to change	4 chirps = horn chirp output 40mS
	Press transmitter Lock button to change	5 chirps = horn chirp output 50mS
	Press transmitter Lock button to change	1 chirp = horn chirp output 10 mS
	or	
Ninth	Press and release the valet switch	2 chirps = valet switch override operation
	Press transmitter Lock button to change	1 chirp = custom code override operation
	or	
Tenth	Press and release the valet switch	2 chirps = 2 step unlock off
	Press transmitter Lock button to change	1 chirp = 2 step unlock on
	or	
Eleventh	Press and release the valet switch	2 chirps = chirp delete from transmitter inactive
	Press transmitter Lock button to change	1 chirp = chirp delete from transmitter active
	or	
Twelfth	Press and release the valet switch	Non Functional On This Unit
	or	
Thirteenth	Press and release the valet switch	1 chirp - all on
	Press transmitter lock button to change	2 chirps = doors off
	Press transmitter lock button to change	3 chirps = hood & trunk off
	Press transmitter lock button to change	4 chirps = all off
	or	
Fourteenth	Press and release the valet switch	Non Functional On This Unit
	or	
Fifteenth	Press and release the valet switch	1 chirp = ch 5 pulsed output
	Press transmitter Lock button to change	2 chirps = ch 5 output as long as button held
	Press transmitter Lock button to change	3 chirps = ch 5-10 second output
	Press transmitter Lock button to change	4 chirps = ch 5-20 second output
	Press transmitter Lock button to change	5 chirps =ch 5 latch on/latch off output
	Press transmitter Lock button to change	5 chirps = ch 6 hold 3 sec for pulsed output
	or	
Sixteenth	Press and release the valet switch	1 chirp = ch 6 pulsed output
	Press transmitter Lock button to change	2 chirps = ch 6 output as long as button held
	Press transmitter Lock button to change	3 chirps = ch 6-10 second output
	Press transmitter Lock button to change	4 chirps = ch 6-20 second output
	Press transmitter Lock button to change	5 chirps =ch 6 latch on/latch off output
	Press transmitter Lock button to change	5 chirps = ch 6 hold 3 sec for pulsed output
	or	
Seventeenth	Press and release the valet switch	1 chirp = ch 7 pulsed output
	Press transmitter Lock button to change	2 chirps = ch 7 output as long as button held
	Press transmitter Lock button to change	3 chirps = ch 7-10 second output
	Press transmitter Lock button to change	4 chirps = ch 7-20 second output
	Press transmitter Lock button to change	5 chirps =ch 7 latch on/latch off output
	Press transmitter Lock button to change	5 chirps = ch 7 hold 3 sec for pulsed output
	or	
Eighteenth	Press and release the valet switch	Non Functional On This Unit
	or	
Press and release the valet switch or turn the ignition off to:		Exit Programming Mode
	or	

Turn ignition switch off then on to advance to feature Bank 3:

To exit program mode, turn ignition off, or press and release valet switch.

RF Programmable Features Bank 3 Is Remote Start Selectable Features:

Feature Selection	1 Chirp	2 Chirps	3 Chirps	4 Chirps	5 Chirps	6 Chirps
1st Defrost Output	**Pulsed**	10 Mins				
2nd RF Start Chirp	Off	**On**				
3rd Run Time	5 Mins	**10 Mins**	15 Mins	20 Mins	45 Mins	60 Mins
4th Parking Lights	**On Steady**	Flashing				
5th Input Check	Voltage	**Tach**	DBI Tach	Hybrid		
6th Voltage Level	**>0.5V B4 Start**	< 0.5V B4 Start				
7th Ign. 2 Select	Off During Crank	**On During Crank**	Same As Accy.			
8th Ign. 3 Select	Off During Crank	**On During Crank**	Same As Accy	Same As Starter		
9th Diagnostics	**Off**	On				
10th Crank Time	0.8 Sec	**1.0 Sec**	1.5 Sec	2.0 Sec		
11th Gas/Diesel	**Gas**	Diesel 10	Diesel 15	Diesel 20		
12th Transponder O/P	**While R/S On**	During Start	Until Ign. Off			
13th Temp Start	**Off**	On				
14th Crank Averaging	**Averaging**	Preset Time				

Note: When averaging, the engine must be started 4 times with the key to be effective.

15th R/S Shock	**Shunt Unit Clear**	Shunt R/S Cycle	Shunt From Tx	
16th Turbo Select	**Off**	3 Mins	5 Mins	10 Mins
17th Black/Blue (Aux O/P)	**Single Pulse**	As Feature #1		
18th One or Two Press Start	**Two Press**	One Press		

Note: When feature #5 is set for Voltage or Hybrid, the unit must also have feature #14 set for Preset Time or the unit will flash the Pk. Lts. 7 times and not start.

When using the RF programmer, enter the program mode as follows:

Turn the ignition on.

Press and release valet switch 3 times.

Turn ignition off then on.

Press and hold valet switch for 5 seconds.

Siren chirps 2 times indicating access to RF feature program mode.

To exit program mode, turn ignition off, or press and release valet switch.

	Action	System Response
	Turn ignition on	No response
	Press and release the valet switch 3 times	1 Chirp - LED 1 flash
	Within 3 seconds, turn ignition Off, On, Off, On	Short chirp, then 2 long chirps
	This Action Accesses Feature Bank 3 Remote Start Selectable Features	
First	Press the valet switch one time	1 chirp = defrost output pulsed
	Press transmitter Lock button to change	2 chirps = defrost output 10 Mins
	or	
Second	Press and release the valet switch	2 chirps = RF start chirp on
	Press transmitter Lock button to change	1 chirp = RF start chirp off
	or	
Third	Press and release the valet switch	2 chirps = run time set for 10 mins
	Press transmitter Lock button to change	3 chirps = run time set fro 15 mins
	Press transmitter Lock button to change	4 chirps = run time set for 20 mins
	Press transmitter Lock button to change	5 chirps = run time set for 45 mins
	Press transmitter lock button to change	6 chirps = run time set for 60 mins
	Press transmitter lock button to change	1 chirp = run time set for 5 mins
	or	
Fourth	Press and release the valet switch	1 chirp = parking lights on steady w/RS active
	Press transmitter Lock button to change	2 chirps = parking lights flashing w/RS active
	or	
Fifth	Press and release the valet switch	2 chirps = tachometer input checking
	Press transmitter Lock nutton to change	3 chirps = DBI Tach Mode
	Press transmitter Lock button to change	4 chirps = Hybrid Mode
	Press transmitter Lock button to change	1 chirp = voltage sense input checking
	or	
Sixth	Press and release the valet switch	1 chirp = greater than 0.5 V check before start
	Press transmitter Lock button to change	2 chirps = less than 0.5 V check before start
	or	
Seventh	Press and release the valet switch	2 chirps = ign 2 on during crank
	Press transmitter Lock button to change	3 chirps = ign 2 same as accessory
	Press transmitter Lock button to change	1 chirp = ign 2 off during crank
	or	
Eighth	Press and release the valet switch	2 chirps = ign 3 on during crank
	Press transmitter Lock button to change	3 chirps = ign 3 same as accessory
	Press transmitter Lock button to change	4 chirps = ign 3 same as starter
	Press transmitter Lock button to change	1 chirp = ign 3 off during crank
	or	
Ninth	Press and release the valet switch	1 chirp = diagnostics off
	Press transmitter Lock button to change	2 chirps = diagnostics on
	or	
Tenth	Press and release the valet switch	2 chirps = crank time 1.0 sec
	Press transmitter Lock button to change	3 chirps = crank time 1.5 sec
	Press transmitter Lock button to change	4 chirps = crank time 2.0 sec
	Press transmitter Lock button to change	1 chirp = crank time 0.8 sec
	or	
Eleventh	Press and release the valet switch	1 chirp = unit set for gasoline engine
	Press transmitter Lock button to change	2 chirps = unit set for diesel engine 10 sec delay
	Press transmitter Lock button to change	3 chirps = unit set for diesel engine 15 sec delay
	Press transmitter Lock button to change	4 chirps = unit set for diesel engine 20 sec delay
	or	
Twelfth	Press and release the valet switch	1 chirp = transponder output while R/S active
	Press transmitter Lock button to change	2 chirps = transponder output during start only
	Press transmitter Lock button to change	3 chirps = transponder output until ignition turned off
	or	
Thirteenth	Press and release the valet switch	Non Functional On This Unit
	or	
Fourteenth	Press and release the valet switch	1 chirp = crank averaging w/voltage input checking
	Press transmitter Lock button to change	2 chirps = preset crank time w/voltage input check
	or	
Fifteenth	Press and release the valet switch	Non Functional On This Unit
	or	
Sixteenth	Press and release the valet switch	1 chirp = turbo timer off
	Press transmitter Lock button to change	2 chirps = turbo timer 3 mins
	Press transmitter Lock button to change	3 chirps = turbo timer 5 mins
	Press transmitter Lock button to change	4 chirps = turbo timer 10 mins
	or	
Seventeenth	Press and release the valet switch	1 chirp = aux o/p Black/Blue single pulse
	Press transmitter Lock button to change	2 chirps = aux o/p Black/Blue as alarm feature #1
	or	
Eighteenth	Press and release the valet switch	1 chirp = double press to start
	Press transmitter Lock button to change	2 chirps = single press to start
	or	
	turn the ignition off to:	Exit Programming Mode

Note : Once you enter the feature programming mode, do not allow more than 15 seconds to pass between steps or the programming will be terminated.

This Remote Start/Alarm System is designed to be used with **Automatic Transmission- Fuel Injection Vehicles Only!** The unit provides a selectable ignition control that allows a number of selectable timed outputs for glow plug preheat in addition to a "Wait To Start Input" either of which may be required for certain diesel vehicles, (see selectable feature #11 Bank 3 & or Green/Yellow Wire). If the diesel engine has a instant fire, (no glow plug preheat system), feature #11 of Bank 3 should remain in the default Gasoline mode setting. For diesel applications, consult your dealer for the type of ignition system used in your particular vehicle. Regardless of the vehicle, Gasoline or Diesel, for every installation, the vehicle **MUST HAVE a Tach Signal Input, Automatic Transmission and Fuel Injection.**

INSTALLATION OF THE MAJOR COMPONENTS:

CONTROL MODULE:

Select a mounting location inside the passenger compartment (up behind the dashboard). The mounting location selected must be within 24" of the ignition switch wiring harness to allow connection of the 6 pin main wiring harness.

Be certain that the chosen location will not interfere with proper operation of the vehicle. Avoid mounting the module to or routing the wiring around the steering shaft/column, as the module or wiring may wrap around or block the steering wheel preventing proper control of the vehicle. Secure the module in the chosen location using cable ties or screws as necessary.

Do Not Mount The Module In The Engine Compartment, as it is not waterproof.

SIREN:

Select a location in the engine compartment that is not accessible from below the vehicle. The selected location must be clear of hot or moving parts within the engine compartment The siren must be pointed downward to prevent water retention and the flared end must be pointed away from and out of the engine compartment for maximum sound distribution. Before securing the siren, check behind your chosen location to assure that the mounting screws will not penetrate any factory wiring or fluid lines. Secure the siren mounting bracket using #8 self taping screws or by first using the mounting bracket as a template, scribe or mark the mounting holes. Drill the marked holes using a 1/8" drill bit, then mount the siren using #8 sheet metal screws.

HOOD PIN SWITCH:

The pin switch included in this package is intended for protecting the hood area of the vehicle. In all cases, the switch must be mounted to a grounded metal surface. When the pin switch is activated, (hood open), it will supply a ground to the input wire activating the alarm. In addition, the hood switch is required for the safety shut down of the remote start unit. If the vehicle is being worked on, this hood switch prevents the remote start activation even if the RF command to start is issued. **This switch must be installed in all applications. Failure to do so may result in personal injury or property damage.** Mount the switch in a location away from water drain paths. If necessary, an optional bracket may be used to move the switch away from rain gutters or allow mounting to the firewall behind the hood seal. In both cases the switch must be set up to allow the hood to depress the switch at least 1/4 inch when the hood is closed and fully extended when the hood is opened. For direct mounting, a 1/4 inch hole must be drilled. Carefully check behind the chosen location to insure the drill will not penetrate any existing factory wiring or fluid lines.

Drill a 1/4 inch hole in the desired location and thread the pin switch into it using a 7/16" nut driver or deep well socket. If using the mounting bracket, first secure the bracket to the desired location and secure the pin switch in the pre-threaded mounting bracket hole.

THE PUSH-BUTTON/LED/RECEIVER/ANTENNA ASSEMBLY:
The Superheterodyne Receiver Antenna Assembly provided with this unit allows routing from below the dash board for maximum operating range. Choose a location above the belt line (dashboard) of the vehicle for best reception. Special considerations must be made for windshield glass as some newer vehicles utilize a metallic shielded window glass that will inhibit or restrict RF reception. In these vehicles, route the antenna toward a rear window location for best reception. Secure the antenna with double stick tape provided. After securing the antenna with tape, we advise also securing a section of the antenna cable to a fixed support. This will prevent the antenna from dropping down in case the double stick tape is exposed to extreme heat which may loosen it's gummed surface. Route the 6 pin connector toward the control module using caution not to pinch the cable as this will cause poor or no RF reception to the control module.

SHOCK SENSOR:
Select a centrally located, solid mounting surface for the shock sensor that will allow consistent operation from all areas of the vehicle. The selected location must be within 18" of the control module to allow routing and connecting of the 4 pin harness. Secure the shock sensor to the chosen location using two #8 self tapping sheet metal screws. The sensor can also be secured to an existing dash brace using cable tie straps. Whichever mounting method is used be sure to allow access to the sensitivity adjustment potentiometer for use later in the installation.

STARTER INHIBIT RELAY:
Select a mounting location within 12" of the ignition switch's low current start solenoid wire. Secure the relay to an existing harness in the chosen location using a cable tie around the relay's wiring harness.
CAUTION! Do not wire tie the metal bracket to an existing wiring harness as vibration may cause chaffing and shorting damaging the factory wiring. If an existing harness is not available then secure the relay's metal mounting tab to an under dash metal brace with a #8 self tapping sheet metal screw. Wire the relay as per the diagram found later in this manual.
This unit is to be used in vehicles with **AUTOMATIC TRANSMISSIONS** only! Although this combination Alarm/Remote Start unit is a sophisticated system with many advanced features, **IT MUST NOT** be installed into a vehicle with a **manually operated transmission**. Doing so may result in serious personal injury and property damage.

IMPORTANT!

DO NOT PLUG THE SIX PIN MAIN POWER HARNESS OR THE MULTI PIN INPUT / OUTPUT HARNESS INTO THE CONTROL MODULE UNTIL ALL CONNECTIONS TO THE VEHICLE HAVE BEEN MADE. AFTER SELECTING YOUR TARGET WIRES AS DEFINED BELOW, DISCONNECT THE NEGATIVE BATTERY CABLE FROM THE VEHICLE BATTERY PRIOR TO MAKING ANY CONNECTIONS.
NOTE: Do not remove the fuse holders from this wire harness. Fuses must be used and located as close as possible to the power source for adequate protection of the vehicle.

WIRING THE 6 PIN MAIN POWER HARNESS:

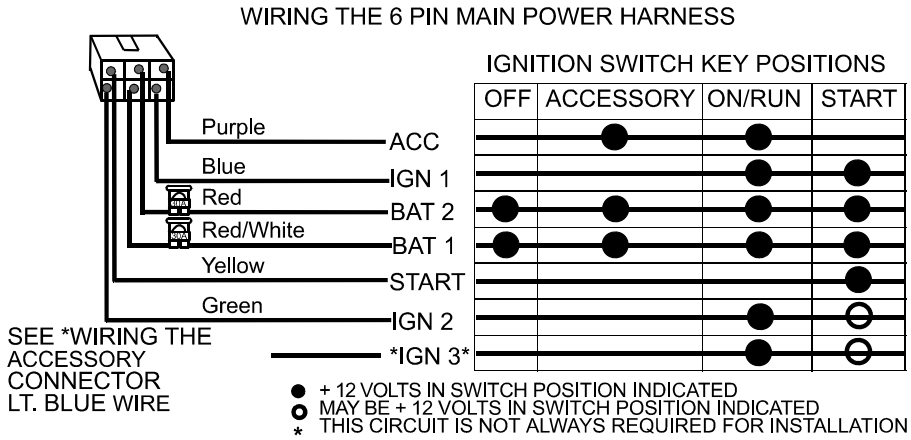

WIRING THE 6 PIN MAIN POWER HARNESS:

NOTE: Do not remove the fuse holders from this wire harness. Fuses must be used and located as close as possible to the power source for adequate protection of the vehicle.

Fused RED w/ WHITE TRACE WIRE: + 12 volt Battery 1 Source
Locate the vehicle battery wire(s) at the ignition switch. Verification: These wires will register voltage in all positions of the ignition switch. Connect the Red w/White wire to the vehicle's battery wire. This wire provides power for the control circuit as well as the ignition 1 and ignition 2 relays.

Fused RED WIRE: + 12 Volt Battery 2 Source
Locate the vehicle battery wire(s) at the ignition switch. Verification: These wires will register voltage in all positions of the ignition switch. Connect the Red wire to the vehicle's battery wire. This wire provides power for the start relay and the accessory relay.

IMPORTANT!
It is the responsibility of the installing technician to determine the load factor of the vehicles electrical circuits when the vehicle is running, and to adequately fuse the two power wires based on that load. If the vehicle, running under load with the air conditioner, heater blower motor, and accessories exceed 24 Amps continuous, we recommend that two fuses be used in combination on each power wire as shown below. For additional information see Tech Update issued 9/30/96.

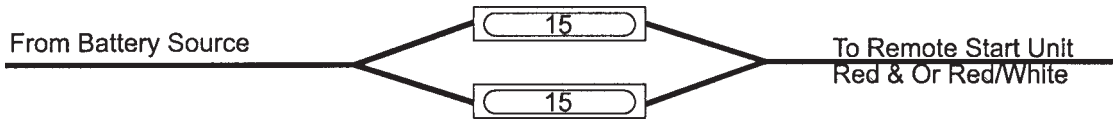

YELLOW Wire: Starter Output

Careful consideration for the connection of this wire must be made to prevent the vehicle from starting while in gear. Understanding the difference between a mechanical and an electrical Neutral Start Switch will allow you to properly identify the circuit and select the correct installation method. In addition you will realize why the connection of the safety wire is required for all mechanical switch configurations.

WARNING! Failure to make this connection properly can result in personal injury and property damage.

In all installations it is the responsibility of the installing technician to test the remote start unit and ensure that the vehicle cannot start via RF control in any gear selection other than park or neutral.

In both mechanical and electrical neutral start switch configurations, the connection of the Yellow wire will be made to the low current start solenoid wire of the ignition switch harness. This wire will have +12 volts when the ignition switch is turned to the start (crank) position only. This wire will have 0 volts in all other ignition switch positions.

NOTE: This wire must be connected to the vehicle side of the starter cut relay (when used). For the electrical neutral switch configuration, this connection must be made between the starter inhibit relay, (when used) and the neutral safety switch as shown in the following diagram.

WARNING! Failure to connect this wire to the ignition switch side of the of the neutral safety switch can result in personal injury and property damage.

SEE NEUTRAL START SAFETY TEST FOR FURTHER DETAILS.

YELLOW START WIRE DETAIL

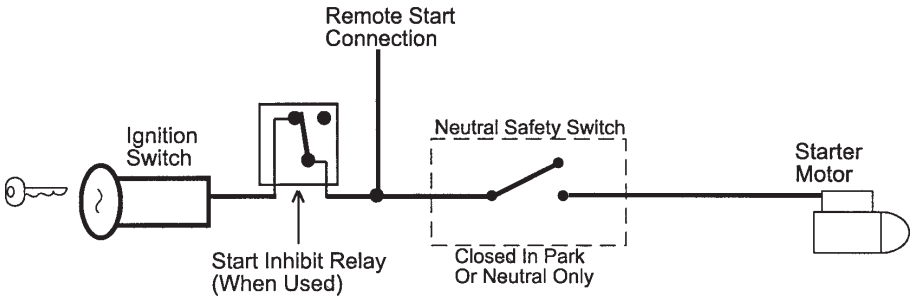

BLUE Wire: Ignition 1 Output

Connect this wire to the ignition 1 wire from the ignition switch. This wire will show +12 volts when the ignition key is turned to the "ON" or "RUN" and the "START" or CRANK" positions, and will have 0 volts when the key is turned to the "OFF" and "ACCESSORY" positions.

For Diesel Applications, this wire must be connected to the ignition circuit that powers the glow plugs if the vehicle requires glow plug pre-heating. (See selectable feature Bank 3 #11)

GREEN Wire: Ignition 2 Output
Connect this wire to the ignition 2 wire from the ignition switch. This wire will show + 12 volts when the ignition key is turned to the "ON" or "RUN" position and is some cases the "START" or CRANK" position. This wire will show 0 volts when the key is turned to the "OFF" and "ACCESSORY" positions.
NOTE: See programming information (Bank 3 Selection #2) concerning this wire to allow output during the "START" mode.

VIOLET Wire: Accessory Output
Connect this wire to the Accessory wire from the ignition switch. This wire will show + 12 volts when the ignition switch is turned to the "ACCESSORY" or "ON" and "RUN" positions, and will show 0 volts when the key is turned to the "OFF" and "START" or "CRANK" positions.

WIRING THE 4 PIN ALTERNATE IGNITION HARNESS

ORANGE/BLACK Wire: Parking Brake Input
This wire is used only when the turbo timer mode, Bank 3, feature # 16 is selected ON. This input insures that the vehicle parking brake is applied whenever the vehicle is set up for and the turbo timer circuit is used. This input must switch to ground when the vehicle's parking brake is applied. Connect the Orange/Black wire to the negative output of the vehicle's parking brake switch.
RED/BLACK Wire: + 12 Volts Input
NOTE: The Red/Black and Pink are dry contacts and may be used for negative switching when necessary. Connecting the Red/Black to chassis ground will result in Pink being ground when the R/S is activated.
This input is to be connected to a separate, (Other than the wire Red or Red/White is connected to), constant on + 12 volt source which will supply + 12 volt power to the additional ignition output, (Pink), wire. Connect this wire to a separate + 12 Volt source.
PINK Wire: Additional Ignition Output
This wire can be used as an additional + 12 Volt ignition output supplied by the Red/Black wire. This output can be selected to be on or off during the start cycle. (See feature bank 3 selection # 8) Connect this wire to the third ignition circuit in the vehicle and set the selectable feature # 8 of Bank 3 according to the way in which the vehicle's ignition switch operates.

Note: Do not remove the fuse holders from this wire harness. Fuses must be used and located as close as possible to the power source for adequate protection of the vehicle.

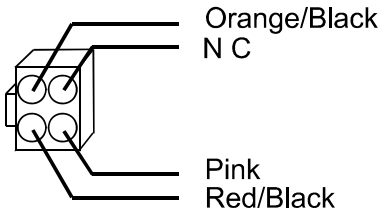

WIRING CONNECTIONS: Multi Pin Accessory Input/Output Harness

White w/ Red Trace Wire: Parking Light Flasher Feed
This wire is the common contact of the on board parking light flasher relay. If the vehicle you are working on has +12 volt switched parking lights, connect this wire to a fused + 12 volt source. (Max. 15 Amps)
NOTE: If the vehicle's parking lights are ground switched, connect this wire to chassis ground.

White Wire: Parking Light Flasher Output
This wire is the normally open contact of the on board parking light flasher relay. Connect this wire to the vehicle parking light feed wire. See diagram below for details on wiring positive switched parking light circuits.

Parking Light Wiring Detail

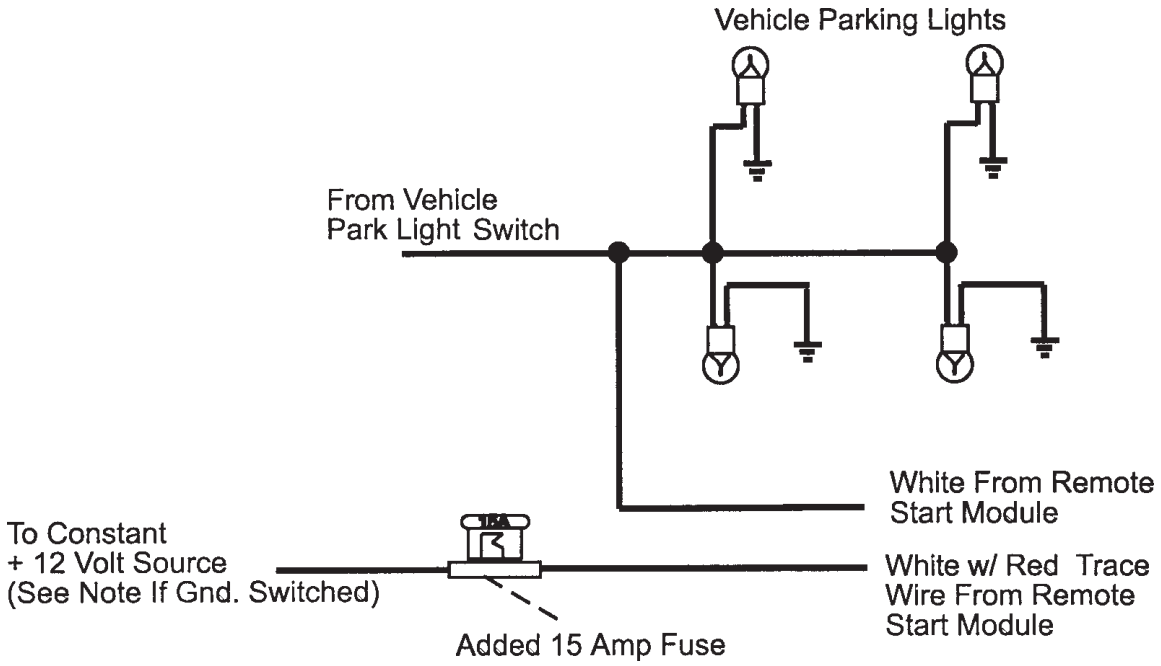

White w/ Black Trace Wire: (+) Siren Output
This is the positive siren feed wire. Route this wire through a grommet in the firewall to the siren location. Connect the White w/ Black Trace wire to the Red wire of the Siren. Secure the Black wire of the Siren to a known chassis ground or solid clean metal surface.

Siren Wiring Detail

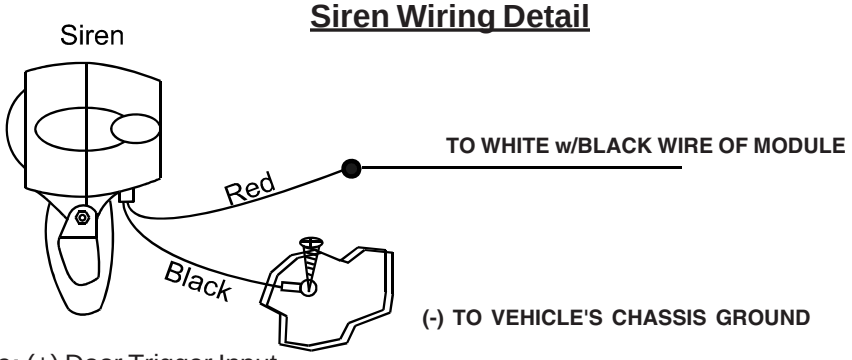

Purple Wire: (+) Door Trigger Input
If the vehicle's door courtesy light switches + 12 volts when the door is opened, (Some Fords and some Imports), you must connect this wire to the positive output from one of the vehicle's door pin switches. In most cases, the Purple wire will need to be connected to only one door switch no matter how many doors the vehicle has as most door lighting circuits are wired in parallel. This wire will be shunted when remote starting the vehicle and will remain shunted, if active, while running under command of the remote start. If this wire is active when the system is armed, the siren will emit three chirps. When the zone clears, the siren will emit 1 chirp to confirm full arming. See below for wiring details.
Note for vehicles with interior delay lighting see programming under title "Completing The Installation".

Positive Door Switch Wiring Detail

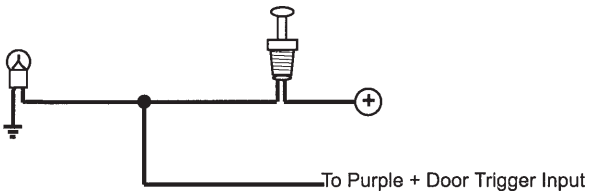

Dark Green Wire: (-) Instant Trigger Input
This is the instant on ground trigger input wire. This wire must be connected to the hood and trunk pin switches previously installed.
NOTE: This wire will be shunted when remote control channel 3 is accessed, (trunk release). This wire will remain shunted all the while there is ground present and for 5 seconds after the ground is removed. This allows the operator to open the trunk via the remote transmitter without having to first disarm the alarm system. See below for wiring detail.

Hood Pin Switch Detail

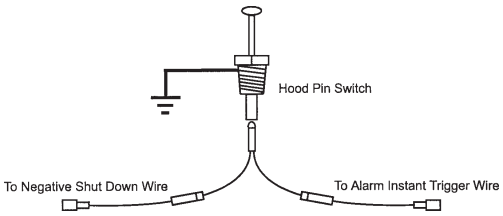

Light Blue Wire: Ground Output While Running Under Remote Start Control
This wire provides a 300mA ground output that becomes active 3 seconds before the Remote Start Unit initializes and remains grounded while running plus an additional 4 seconds after the Remote Start Unit turns off. In all of the applications described below, a relay will be required.
The Light Blue wire can be used to accommodate the following situations:

A. Shock Sensor By Pass:

If there is a Non Plug in Shock Sensor used with the alarm system and it is not shunted during the Remote Start activation period, then vibration from the running vehicle can cause the alarm to trigger. In this case, connect the Light Blue Wire to terminal #86 of a external relay. Connect terminal # 85 of the relay to a fused + 12 volt battery source. Cut the shock sensor trigger wire and connect one end of the cut wire to terminal #30 and the other end of the cut wire to terminal #87a. Just before the Remote Start unit is activated, the relay contacts will open, preventing the shock sensor's operation until the Remote Start unit shuts off.

B. Additional Ignition Output:

Some newer vehicles more than three ignition outputs to start and keep the vehicle's engine running. If this is the case, connect the Light Blue wire to terminal #86 of an external relay. Connect terminal # 30 & # 85 to a fused + 12 volt battery source rated for a minimum of 25 Amp. Connect terminal # 87 to the third ignition wire in the vehicle.

C. GM VATS Key Override:

If the vehicle has the General Motors VATS system installed, you will need to bypass the system while the vehicle is operating under the control of the Remote Start Unit. To Do This:

1. Measure the resistance of the resistor pellet on the ignition key then select a resistor within 5% of the key's value from the resistor pack supplied.
2. Locate the pair of VATS wires in the vehicle, usually a pair of thin gauge wires running from the ignition switch to the VATS control module.

NOTE: These wires are typically White w/ Black trace and Violet w/ Yellow trace, however in later model Cadillacs, they are run through an orange sleeve, and are either both Black, both Yellow, or both White wires. Consult the factory service manual for additional information.

3. Connect the Light Blue Wire from the Remote Start Unit to terminal #86 of an external relay. Connect terminal #85 of the relay to a fused + 12 volt battery source.
4. Cut (#1) wire (as shown), and connect the ignition switch side of the cut wire to terminal #87a of the relay. Connect the other side of the (#1) wire to terminal #30.
5. Connect the previously selected resistor from terminal #87 to the second (#2) wire (as shown).

NOTE: The above information and following diagram is for the GM VATS system only. For GM PASS LOCK System you will require the Audiovox AS-PASS II Module.

General Motors VATS By-Pass Diagram

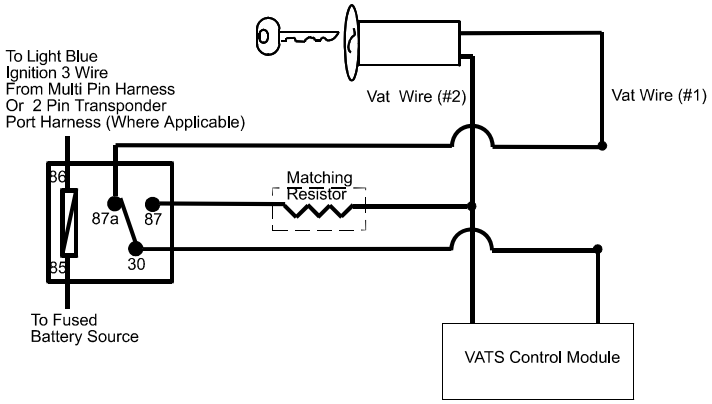

Green w/ White trace Wire: Entry Illumination Ground Output

This wire provides a 30 second ground output (300 mA Max.) whenever the remote is used to disarm the alarm or to unlock the doors and provides a continuous pulsed output whenever the alarm is triggered. This wire should be connected to an external relay and wired to the vehicles interior entry lighting whenever the optional Interior Illumination circuit is desired. Refer to the following page for relay wiring details.

Entry Illumination Detail

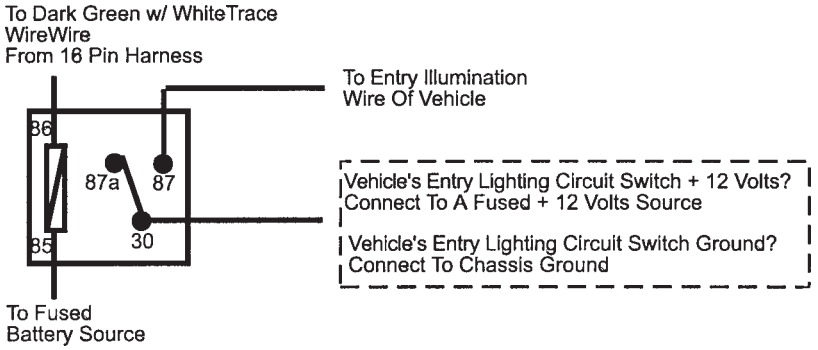

Gray w/ Black Trace Wire: Negative Inhibit Input Plus Trigger When Armed
The Grey w/ Black Trace wire provides an instant shutdown for the Remote Start Control Module whenever it is grounded also trigger for the alarm when armed. Connect the Grey w/ Black trace wire to the hood pin switch previously installed. This wire must be routed through a grommet in the firewall and connected to the hood pin switch. If the pin switch is to be used with an alarm system, connect this wire using the diode assembly provided.
WARNING! This connection is a safety wire and must be connected as shown and tested as specified. Failure to do so may result in personal injury or property damage. See detail of wiring in the following diagram. This wire may also be used if the vehicle brake light circuit switches ground to the brake lights. An isolation diode must be used for ground switched brake light circuits and must be connected to the output of the brake switch.

Gray w/ Black Trace Negative Inhibit Safety Shut Down Detail

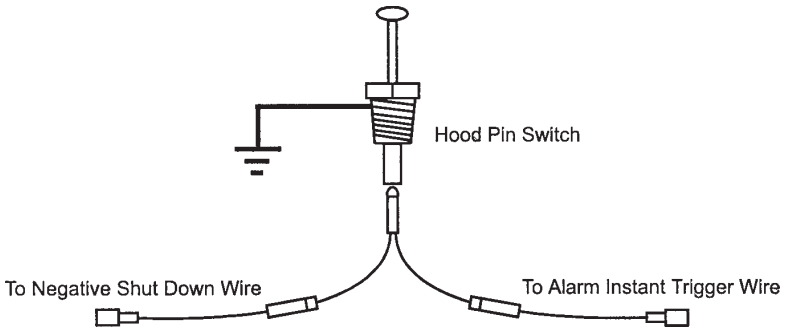

Orange Wire: Ground When Armed Output
This wire provides a 300 mA ground output when the alarm circuit is armed to control the starter inhibit relay. Connect the Orange wire to terminal #86 (orange wire) of the relay provided. Connect terminal #85 (red wire) of the relay to an ignition wire in the vehicle that is +12 volts when the ignition switch is turned to the on and start positions and off when the key is off. Locate and cut the low current start solenoid wire found at the vehicles ignition switch harness. This wire will have + 12 volts when the ignition key is moved to the start (crank) position and will have 0 volts in all other key positions. Connect one side of the cut wire to terminal #87a (Black wire) of the relay. Connect the other side of the cut wire to terminal #30 (White/Black wire) of the relay. See below for detail of wiring, also see Yellow Start wire detail for connection to vehicle considerations.

Starter Inhibit Wiring Detail

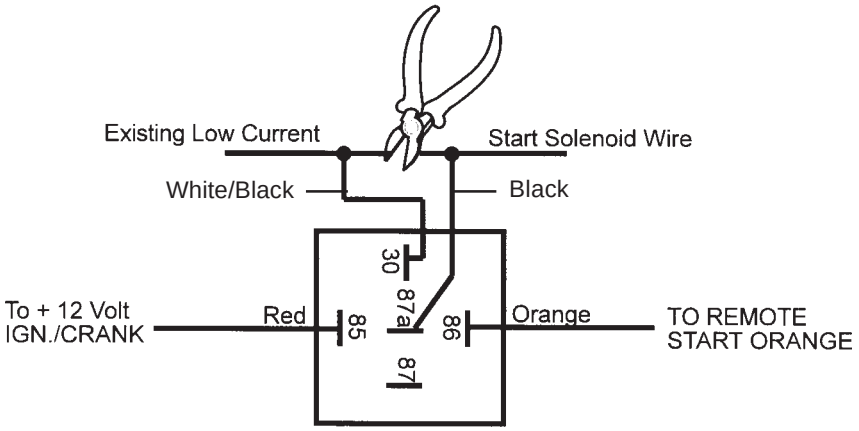

Brown w/ Black Trace Wire: Positive Inhibit Input Plus Trigger When Armed
The Brown w/ Black Trace wire provides an instant shutdown for the Remote Start Control module whenever it gets + 12 volts also triggers the alarm when armed. If the Brake lights switch in the vehicle switches + 12 volts to the brake light circuit, connect the Brown w/ Black trace wire to the output side of the brake switch. This will allow the Remote Start to shut down if an attempt is made to operate the vehicle without the key while running under the control of the Remote Start. In most vehicles, in order to shift into gear, the brake pedal must be depressed. The brake input will in turn cause the remote start unit to shut off. See detail in the following diagram for wiring the brake light circuit.

Brake Switch Positive Shutdown Detail

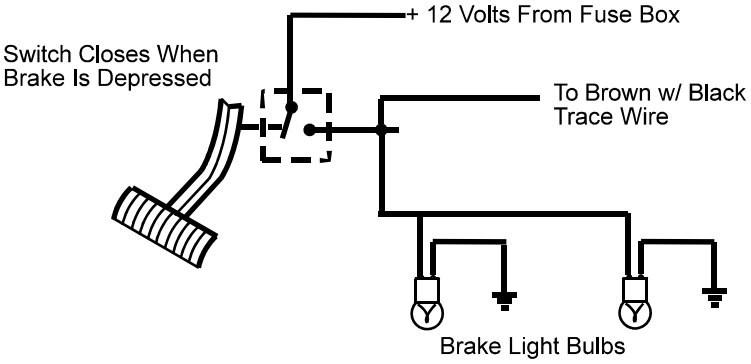

Black Wire: Chassis Ground Source
Connect the Black wire to a known vehicle ground source or to a solid clean metal part of the chassis. Be certain to remove any paint or grease and secure this wire with a self tapping screw and ring terminal.

Chassis Ground Connection Detail

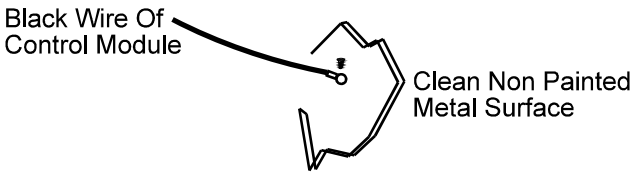

Green w/ Orange Trace Wire: Tachometer Input Signal
This wire will continually monitor the engine's tach rate while the unit is under power of the Remote Start module. This wire will be routed to the vehicle ECM tach input or through the firewall into the engine compartment and connect to the negative side of the ignition coil. This Remote Start unit learns the tach rate of the vehicle and in most cases will operate properly from one multi coil pack regardless of the number of cylinders. If the vehicle has a single coil unit for each cylinder, it may be necessary to connect this wire to more than one cylinder for proper tach reference. See multi coil wiring detail shown later in this manual for additional information.
NOTE: For Hybrid mode, Bank 3 feature selection 5, this connection is not used, the unit will start the vehicle and run the allotted time based on feature selection and crank duration.

Tachometer Input Wiring Detail

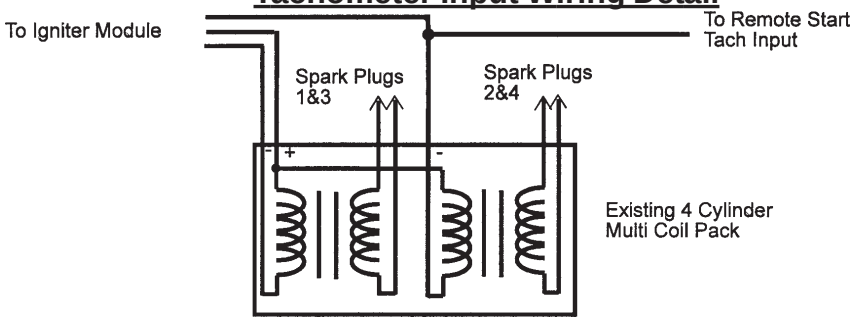

Brown Wire: Negative Door Trigger
If the vehicle's door courtesy light switches ground when the door is opened, (Most GMs and Imports), you must connect this wire to the negative output from one of the vehicle's door pin switches. In most cases the Brown wire will need to be connected to only one door switch no matter how many doors the vehicle has as most door lighting circuits are wired in parallel. This wire will be shunted when remote starting the vehicle and will remain shunted, if active, while running under command of the remote start. If this wire is active when the system is armed, the siren will emit three chirps. When the zone clears, the siren will emit 1 chirp to confirm full arming. See below for wiring detail.
NOTE: For vehicles with interior delay lighting see programming under title "Completing The Installation".

Negative Door Switch Wiring Detail

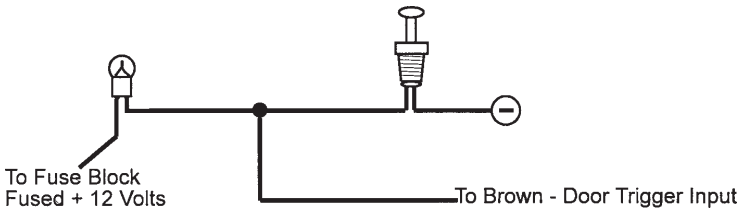

Dark Blue Wire: Delayed 300mA Pulsed Channel 3 Output
The Dark Blue wire supplies a 300mA ground pulsed output whenever channel three of the receiver is accessed. Pressing the pre-programmed transmitter button for three seconds will access channel two. This is a low current output and must be connected to a relay to supply power to the trunk release or the circuit you wish to control. Connect the Dark Blue wire to terminal # 86 of a VF45F11 P&B relay or equivalent. Connect terminal # 85 of the relay to a fused + 12 volt source. Connect the common, normally open, and normally closed contacts of the relay to perform the selected function of channel 3. Refer to the following page for relay wiring detail.

Channel 3 Relay Wiring Detail

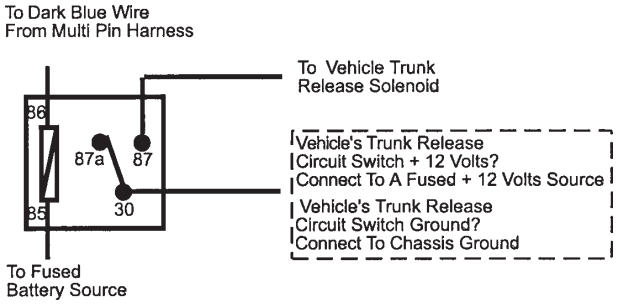

Green w/ Black Trace Wire: 300mA Latched Channel 4 Output
The Green w/ Black Trace wire supplies a 300 mA switched output whenever channel four of the receiver is accessed. Pressing the pre-programmed transmitter button(s) will access channel four and will remain active, for up to 20 seconds, as long as the transmitter button(s) is held. This is a low current output and must be connected to a relay to supply power to the device you intend to control. Connect Green w/ Black Trace wire to terminal #86 of a VF45F11 P&B relay or equivalent. Connect terminal #85 of the relay to a fused + 12 volt source. Connect the common, normally open, and normally closed contacts of the relay to perform the selected function of the channel 4 output.
NOTE: This wire also can be used for defrost activation as dictated by the setting of feature # 1 of Bank 3. Anytime the vehicle is running under control of the Remote Start and Channel 4 is activated, then dependent on the selection of this feature, Green/Black will be activated as a pulse for 1 second, or for 10 minutes. Note this wire will not operate when the vehicle is running under the power of the ignition key, only while under the control of the remote start or if not used for defrost then an output will occur as indicated above.
Dark Blue/Black Trace Wire: External Trigger Input
The Dark Blue/Black trace wire allows the remote start unit to be activated from an external source. The intent of this wire is to allow the unit to be controlled from a "POSSE/CAR-LINK" paging system or similar device. When this wire receives a ground pulse, the unit will start the vehicle. Connect this wire to a ground pulsed output from the controlling circuit.
Black w/ White Trace Wire : 300 mA Horn Output
The black w/ white trace wire is provided to beep the vehicle's horn. This is a transistorized low current output, and should only be connected to the low current ground output from the vehicle's horn switch.
If the vehicle uses a + 12 VDC horn switch, then connect the black w/ white trace wire to terminal 86 of the AS 9256 relay (or an equivalent 30 Amp automotive relay), and connect relay terminal 85 to a fused + 12 VDC battery source. Connect relay terminal 87 to the vehicle's horn switch output, and connect relay terminal 30 to a fused + 12 VDC battery source.
White w/ Blue Trace Wire: Low Current (-) Ground Headlight Output
The White w/ Blue Trace wire is provided to operate the optional headlamp illumination feature of the system. This is a low current (300mA) output and must be connected to an external relay to control the high current switching circuit of the vehicle's headlamps. To use this option, connect the White /w Blue Trace wire to terminal # 86 of a P&B VF45F11 relay or equivalent. Connect Terminals #85 and # 30 to a fused + 12 Volts source with a current capability equal to or in excess of the factory headlamp fuse. Connect terminal # 87 of the relay to the switched + 12 volt wire feeding the vehicle's headlamp circuit.
NOTE: For ground switched headlamp circuits, Connect the White /w Blue Trace wire to terminal # 86 of a P&B VF45F11 relay or equivalent. Connect Terminal #85 to a fused + 12 Volts source. Connect terminal # 30 to a clean chassis ground. Connect terminal # 87 to the ground switched headlamp control wire in the vehicle.
Orange w/ White Trace Wire : 300 mA Ground Output When Disarmed - N. O. Starter Disable
(Optional Relay Required).
This wire is provided to control the starter cut relay. Connect the orange w/white wire to terminal 86 of the relay. Connect relay terminal 85 to an ignition wire in the vehicle that is live when the key is in the on and crank positions, and off when the key is in the off position. (This is typically where the yellow, (ignition), wire of an alarm would be connected). Cut the low current starter solenoid wire in the vehicle, and connect one side of the cut wire to relay terminal 87. Connect the other side of the cut wire to relay terminal 30.

NOTE: This is a normally opened starter cut arrangement, when power is removed from the security system, the starter disable feature will remain operational, and the vehicle will not start. Audiovox does not recommend using the Orange w/ White trace wire to interrupt anything but the starting circuit of the vehicle.

Lt Green Wire: (-) Instant Trigger Zone 1

This is a instant on ground trigger input intended for the connection of optional triggering devices. The ground trigger output wire of motion detectors, microwave detectors, or glass break detectors, can be connected to this Light Green trigger input wire.

Lt Blue/Green Wire : DELAYED 300 mA PULSED OUTPUT / CHANNEL 5

The light blue/green wire pulses to ground via an independent RF channel from the keychain transmitter. This is a transistorized, low current output, and should only be used to drive an external relay coil.

WARNING: Connecting the light blue/green to the high current switched output of trunk release circuits, some remote start trigger inputs, will damage the control module.

Connect the light blue/green to terminal 86 of the AS - 9256 relay (or equivalent 30 A automotive relay) and wire the remaining relay contacts to perform the selected function of channel 5.

Lt Blue/Black Wire : DELAYED 300 mA PULSED OUTPUT / CHANNEL 6

The light blue/green wire pulses to ground via an independent RF channel from the keychain transmitter. This is a transistorized, low current output, and should only be used to drive an external relay coil.

WARNING: Connecting the light blue/black to the high current circuits, will damage the control module.

Connect the light blue/black to terminal 86 of the AS - 9256 relay (or equivalent 30 A automotive relay) and wire the remaining relay contacts to perform the selected function of channel 6.

Blue/Red Wire : DELAYED 300 mA PULSED OUTPUT / CHANNEL 7

The light blue/red wire pulses to ground via an independent RF channel from the keychain transmitter. This is a transistorized, low current output, and should only be used to drive an external relay coil.

WARNING: Connecting the light blue/red to the high current circuits, will damage the control module.

Connect the light blue/red to terminal 86 of the AS - 9256 relay (or equivalent 30 A automotive relay) and wire the remaining relay contacts to perform the selected function of channel 7.

Green/Yellow Wire: DIESEL WAIT TO START INPUT

The green/yellow wire, when connected to the wire that get + 12 volts during the glow plug preheat stage will delay the starter output until this wire drops the 12 volts. In other words, in a Diesel vehicle with glow plug preheat circuit, when the ignition is turned on, the vehicle will not crank until the glow plugs are hot enough to fire the atomized fuel oil when injected into the cylinder. By connecting this wire to the glow plug + 12 volt wire, when the remote start unit activates the ignition one output, the glow plug output also activates. The remote start sees the green/yellow with positive voltage and waits for this to go inactive(drop the 12 volts) before activating the starter motor. If this wire is not used or you have difficulty accessing the glow plug preheat circuit, you may elect to utilize the Diesel timed output as specified in Remote Start feature selection #9. **NOTE:** If green/yellow is used, it will override or negate any setting of feature #9.

WIRING THE 4 PIN AUXILIARY OUTPUT HARNESS

The auxiliary 4 pin connector provides low current outputs to control various functions in the vehicle during different stages of the Remote Start unit's operation. Understanding these outputs and the time in which they occur will allow you to determine if they are needed for the particular vehicle you are working on as well as how to use them.

Black w Blue Trace Wire: Pulsed Ground Output Before Start

The Black w/ Blue Trace wire will provide a 1 second 300 mA pulsed ground output 1.5 second before the remote start unit activates as well as when the transmitter is used to disarm the system. Typical use for this output would be to disarm a factory theft deterrent system to prevent false triggering of the factory alarm when the remote start unit engages or when the system is used to unlock the doors.

NOTE: This output can be selected to operate like the door lock output as set in alarm feature setting #1 by selecting feature #7 on.

Black w/ Light Green Trace Wire: Pulsed Ground Output After Start

The Black w/ Light Green Trace wire will provide a 1 second 300mA pulsed ground output after the vehicle is started under control of the remote start unit. Typically this wire will be used to re-lock the vehicle doors if the doors unlock automatically when the factory anti-theft system is disarmed. This wire will also activate when the transmitter is used to alm/lock the system.

Black w/ Red Trace Wire: Pulsed Ground Output After Shutdown

The Black w/ Red Trace wire will provide a 1 second 300 mA pulsed ground output after the remote start unit shuts down. This output will occur regardless of whether the circuit times out or is manually terminated. Typically this output will be used to re-lock the vehicle doors if the doors unlock automatically when the ignition circuit transitions to off.

Black w/ Yellow Trace Wire: Ground Output During Start (Crank)
The Black w/ Yellow Trace wire will provide a 300 mA ground output while the starter output of the remote start unit is active. This output can be used to activate the Crank Low/Bulb Test wire found in some GM vehicles. This wire is also referred to as the ECM wake up wire in some vehicles.
NOTE: The outputs above are low current outputs and must be used with a relay if the circuit's requirement is more than 300 mA.

2 Pin Transponder Control Output: (Yellow Connector)
This output is intended to allow the control of a transponder bypass interface module or transponder bypass relay. The system also allows software selections to control the way in which this output operates, see remote start feature # 10 for setting this output.
When the unit is selected for output during the start sequence, this output will be active at the same time Ign. 3 becomes active, and will remain active until the vehicle has started. This will be used for one time read transponder circuits.
When the unit is selected for transponder on, this output will become active at the same time ign. 3 becomes active, and will remain active all the time the unit is operational under the control of the remote start. When the unit is selected for continuous and the vehicle is started via the Remote Start, this output will become active at the same time ign. 3 becomes active and will remain active until the ignition in the vehicle goes low. This will allow the unit to be used for continuous read transponders circuits.

4 Pin Upgrade Telematic Module:
Red = + 5 Volts / Black = Ground / White = Data TX / Yellow = Data RX
Connect the 4 pin harness found in the Telematic one way module kit to the mating port on the controlling circuit.
NOTE: If using the TWO WAY Telematic module, only Ground, TX, and RX are used on this port, the + 12 volt supply for the two way module must be sourced separately or the unit will not operate.

6 Wire Antenna/Receiver PB/LED Connector:
Plug the previously routed antenna connector from the antenna receiver assemble into the mating connector of the control module. This connector supplies 12 volts, ground and RF data input and output, LED cathode, and Valet Enable to and from the antenna receiver and the remote start module. Be certain this connector is firmly seated making good contact to the control unit.

4 Pin Shock Sensor: (White Connector)
The Red (+12 volt), Black (ground), Blue (pre-detect) and Green (full trigger when armed) wires loaded into the white connector shell are the inputs/outputs of the shock sensor. Route the 4 wire harness from the shock sensor to the remote start control unit and plug the 4 pin white connector into the mating 4 pin connector shell of the control module.
NOTE: While operating under the control of the remote start unit the shock sensor will be shunted (bypassed). Once the remote start shuts down, the shock sensor will be re-enabled.

3 Pin Door Lock/Unlock Harness: (White Connector)
The Red and Green wires will provide either a pulsed ground output to the factory door lock control relay, or a pulsed + 12 volt output to the factory door lock control relay. In either case, the maximum current draw through these outputs must not exceed 300 mA. The Red w/Black trace wire will provide a pulsed ground only, and will only provide an output when the unlock button of the transmitter is pressed a second time after a first unlock command was issued. This is used for second step unlock or all doors unlock in a two step circuit. In this arrangement, Red is used to control the drivers door unlock relay, and the Red/Black will be used to control unlock of all other doors.

3 Wire Ground Switched Door Lock Circuits:
In this application, the Red wire of the door lock harness provides a ground pulse during the arming sequence, or pulsed ground lock output. Connect the Red wire to the low current ground signal wire from the factory door lock switch to the factory door lock relay.
The Green wire of the door lock harness provides a ground pulse during the disarming sequence, or pulsed ground unlock output. Connect the Green wire to the low current ground signal wire from the factory door unlock switch to the factory door unlock relay. See Below For Wiring Detail.

3 WireGround Switched Door Lock/Unlock Wiring Detail

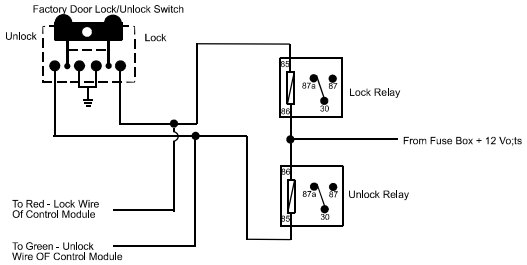

3 Wire Positive Switched Door Locks:
In this application, the Red wire of the door lock harness provides a + 12 volt pulse during the disarming sequence, or pulsed 12 volt unlock output. Connect the Red wire to the low current 12 volt signal wire from the factory door unlock switch to the factory door unlock relay.
The Green wire of the door lock harness provides a + 12 volt pulse during the arming sequence, or pulsed 12 volt lock output. Connect the Green wire to the low current 12 volt signal wire from the factory door lock switch to the factory door lock relay. See Below For Wiring Detail.

3 Wire Positive Switched Door Lock/Unlock Wiring Detail

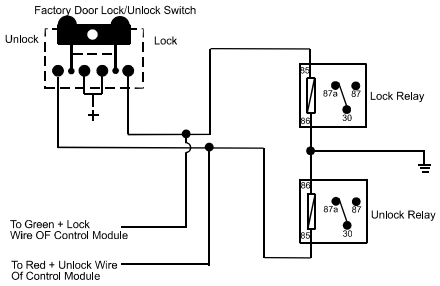

3 Wire Ground Switched 2 Step Door Locks:
In this application, the **red wire** provides a ground pulse during arming, or the **pulsed ground lock** output. Connect the red wire to the wire that provides a low current ground signal from the factory door lock switch to the factory door lock control relay.
The **green wire** provides the first ground pulse during disarming, or the **drivers door pulsed ground unlock** output. Connect this wire to the **drivers door unlock** relay that requires a low current ground signal to unlock only the drivers door. If the vehicle does not have a separate drivers door relay, one will have to be added. Locate the drivers door unlock motor wire and cut it at a convenient location to allow wiring of an optional relay. Connect the door side of the cut wire to terminal 30 of the optional relay added. Connect the vehicle side of the cut wire to terminal 87a of the optional relay added. Connect the green wire of the 3 pin harness to terminal 86 of the optional relay added. Connect terminal 85 of the optional relay added to a fused constant + 12 volt source. Most vehicles door lock/unlock motor legs rest at ground, and switch +12 volts to the door lock/unlock motor legs for operation, if this is the case in the vehicle you are working on, connect the remaining terminal, 87, to a fused + 12 volt source. In the rare instance that the vehicle door lock/unlock motor legs rest at + 12 volts and switches ground to the door lock/unlock motors, connect the remaining terminal, 87, to chassis ground.

The **Red/Black** wire provides a pulse ground output when the unlock button of the transmitter is pressed a second time after disarming. Connect the **Red/Black** wire to the wire that provides a low current ground signal from the factory door unlock switch to the factory door unlock control relay.

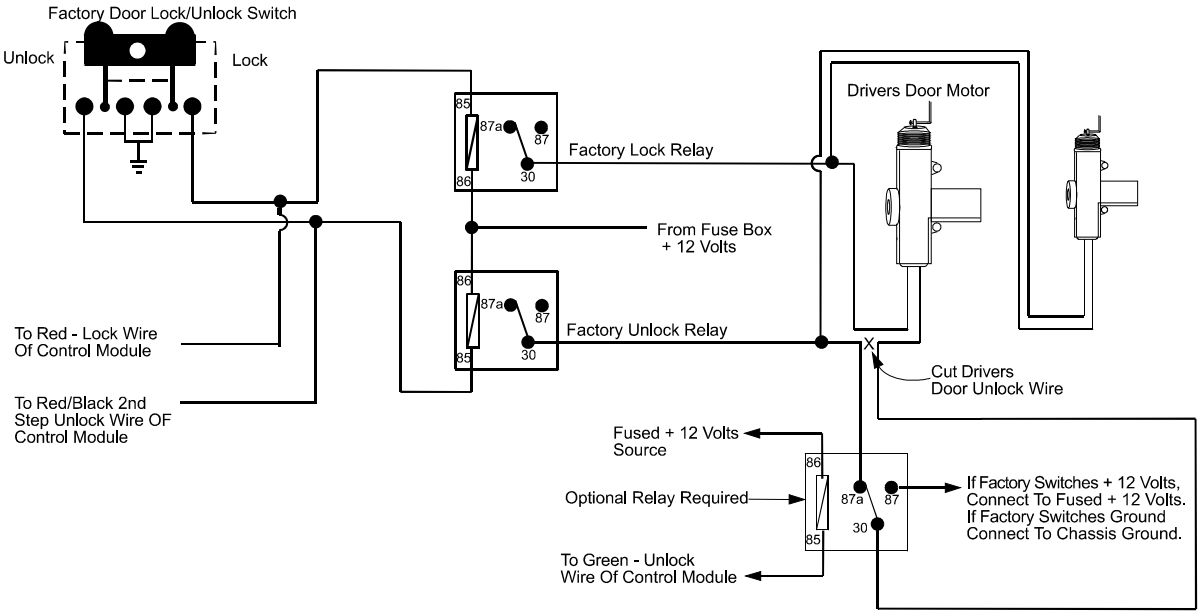

3 Wire Positive Switched 2 Step Door Locks:

The **green wire** provides a positive pulse during arming or the **pulsed + 12 volt lock** output. Connect the green wire to the wire that provides a low current positive signal from the factory door lock switch to the factory door lock control relay.

The **red wire** provides a positive pulse during disarming or the **drivers door pulsed positive unlock** output. Connect this wire to the **drivers door unlock** relay that requires a low current positive signal to unlock only the drivers door. If the vehicle does not have a separate drivers door relay, one will have to be added. Locate the drivers door unlock motor wire and cut it at a convenient location to allow wiring of an optional relay. Connect the door side of the cut wire to terminal 30 of the optional relay added. Connect the vehicle side of the cut wire to terminal 87a of the optional relay added. Connect the red wire of the 3 pin harness to terminal 86 of the optional relay added. Connect terminal 85 of the optional relay added to chassis ground. Most vehicles door lock/unlock motor legs rest at ground, and switch +12 volts to the door lock/unlock motor legs for operation, if this is the case in the vehicle you are working on, connect the remaining terminal, 87, to a fused + 12 volt source. In the rare instance that the vehicle door lock/unlock motor legs rest at + 12 volts and switches ground to the door lock/unlock motors, connect he remaining terminal, 87, to chassis ground.

The **Red/Black** wire provides a pulse ground output when the unlock button of the transmitter is pressed a second time after disarming. Because the vehicle you are working on requires a positive pulse from the factory door lock switch to the factory door lock control relay, you will have to add a relay to invert the output polarity of this wire. Connect the **Red/Black** wire to terminal 86 of the optional added relay. Connect terminal 85 & 87 to a fuse + 12 volt source. Connect terminal 30 to the low current door unlock wire from the factory door switch to the door unlock control relay.

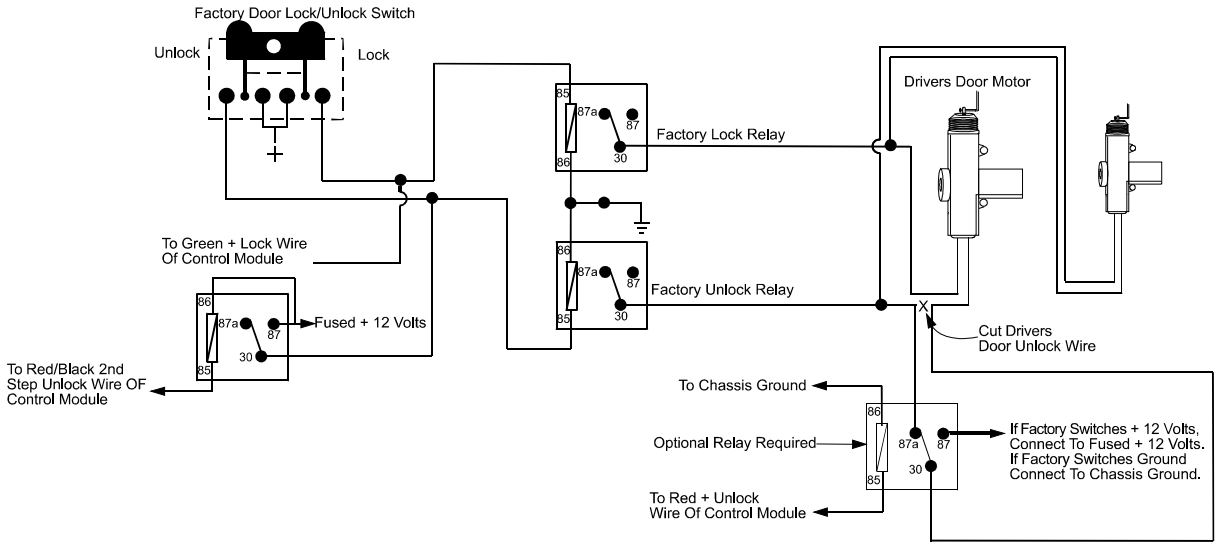

NOTE: <u>Resistive Circuits, As Well As 4 Wire Polarity Reversal and 5 Wire Alternating 12 Volt Door Lock Control Circuits</u>
These applications require the use of additional components which may include relays, fixed resistors, or for convenience, a Door Lock Interface. Refer to the AUDIOVOX Door Lock Wiring Supplement and or the Audiovox fax back service for information on your particular vehicle for properly connecting to these types of circuits.

<u>TIMED START PROGRAM</u>:
The Remote Start unit has the ability to start the vehicle automatically at timed intervals. This feature is useful in extremely cold climates where starting the engine is the only means to keep the battery charged and fluids warm. The operator has the option to have the unit start every 2 or 4 hours for a maximum of 48 hours. Factory preset is to start at 4 hour intervals. To select 2 or 4 hour automatic start timer:
1. Start By Holding the Push Button Switch found on the windshield mount receiver on.
2. While Holding the Push Button Switch Turn The Ignition Switch On Then Off
3a) Within 10 seconds of turning the ignition switch off, Release and then Push On and release the Push Button Switch 2 times holding it on the second time until the siren and or lights flash and chirp 2 times indicating that the 2 Hour Start Interval has successfully been set. or
3b) Within 10 seconds of turning the ignition switch off, (Step 2) Release
and then Push On and release the Push Button Switch 4 times holding it on the fourth time until the siren and or lights flash and chirp 4 times indicating that the 4 Hour Start Interval has successfully been set.
NOTE: Once selected, 2 or 4, this timer interval will remain in memory until it is manually changed. To change, the above sequence will have to be followed.
<u>TIMED START OPERATION</u>:
To begin the start timer, within 10 seconds of turning off the ignition switch, activate the RF command to start 2 times. (Press the start button four times). The lights will flash and the siren will chirp 4 times. Indicating timed interval mode has been initiated. The vehicle will automatically start every 2 or 4 hours as programmed. To cancel the timed start mode start the vehicle either by RF or by the ignition key.

TEMPERATURE START:
When Temperature Start, Bank 3 feature #13 is selected on, the temperature start mode can be activated from the transmitter. See owners manual for turning this feature on from the transmitter. Once activated, the unit will start 1 time if the vehicle temperature reaches "0 " and then will run the allotted time.

NOTE: When selecting Diesel operation, (Bank 3 Feature #11), over gasoline, the only change is to the ignition circuits. When Diesel is selected, the ignition circuits will power up 10, 15, or 20 seconds before the start circuit. The intent of this feature is to allow the glow plug warming required by some diesel engines. If your vehicle is a instant start diesel, it is not necessary to activate this feature.
NOTE: When selecting Diesel mode, be certain that the intended vehicle has a true tach reference and be certain to connect the tach input wire. Also note, if the "Diesel Wait to Start" input is connected, (Green/Yellow) this wire will take precedence over the Diesel selection of bank 3 feature 11.

Programming Tach Rate:
NOTE: All applications require that tach be programmed.
The unit will not operate unless tach is programmed. If an attempt is made to start the vehicle via the remote start without first programming tach, the unit will flash the parking lights 7 times indicating tach has not been learned and stored. If the tach rate is not properly programmed to the specific vehicle, the unit may not realize that the vehicle is running in certain instances reengage the starter motor.
The Remote Start Unit will learn the tach rate of most vehicle's single coil, multiple coil packs, or single injector. To learn tach.
1. Turn the ignition key to the On position.
2. Press and release the valet/program push button switch 3 times.
3. Immediately turn the ignition key Off.
4. Press and hold the valet/program push button switch, then start the vehicle using the key.
5. When the unit senses the tach signal, the parking lights will begin to flash.
6. Release the valet/program pushbutton switch. The parking lights will turn on for three seconds to indicate that the learned tach signal is stored and the unit is out of the tach learn mode.
NOTE: If the unit fails to learn tach rate due to an improper tachometer connection or a poor tach source, the parking lights will not flash. To correct this situation, locate and connect the Green/Orange wire to the proper tach signal, and then repeat the tach learn routine.

Diagnostics:
Enter Bank 3 and turn on selectable feature # 9 as described on the front pages of this manual.

NOTE: Diagnostic mode is a temporary mode. Once you have accessed the diagnostic mode, the unit will pause for two seconds then begin to flash the last stored shut down code. This code will be displayed three times in succession, then the unit will automatically exit the diagnostic on mode.
The parking lights will flash a number of times indicating the reason for the last remote start shutdown. The light flash indications are as follows:

1 Flash	Run timer expired
2 Flashes	Low or no tach signal (RPM)
3 Flashes	Positive or Negative inhibit wire activation
4 Flashes	Control switch moved to the off position
5 Flashes	RF shutdown, Remote signal received, or manual start trigger wire reactivated.
6 Flashes	High tach signal (RPM)
7 Flashes	Tach signal has not been learned

Multi Coil Pack Adaptor: (Optional)
The multi coil pack adapter, is designed for use with vehicles that do not respond to single coil tach programming. Although the tach resolution of this circuit is designed to interface direct with most vehicles, there may be an occasion where the following circuit may be required. Construct the adaptor as shown below.
To use the adaptor, the Green/Black wires must connect to the negative side of the ignition coil(s).
1. For vehicles utilizing independent coils per cylinder, connect the three Green/Black leads to alternate

coils. To achieve optimum performance the coil signals must be evenly distributed. This is accomplished by first mapping out the firing order of the engine in groups of as indicated below. Draw a circle around any of the columns. The Green/Black wires should be connected to the negative (-) terminal of the respective cylinder number which appears in any of the circles.

2. For vehicles utilizing 2 cylinder firing per coil pack, connect Green/Black to the tach side of each coil pack. For 8 cylinder, four coil systems, connect to any of the three coils.
3. Connect the Yellow wire to a +12 volt ignition 1 source. This wire will have +12 volts with the ignition in the on and start position and have 0 volts with the ignition in the off position.
4. Connect the Green wire to the (Green) or (Orange/Green) tach input of the Audiovox remote start unit.

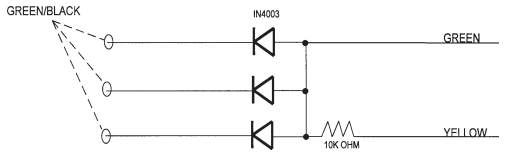

IF THE FIRING ORDER IS 1,5,6,3,4,2,7,8

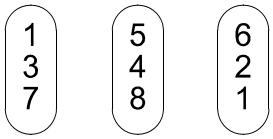

CONNECT TO CYLINDERS 1,3,7 OR 5,4,8 OR 6,2,1

IF THE FIRING ORDER IS 1,8,4,3,6,5,7,2

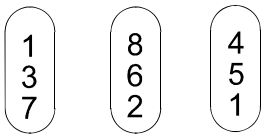

CONNECT TO CYLINDERS 137, OR 862, OR 451

TESTING YOUR INSTALLATION:

WARNING! The following procedure must be performed after the installation of an Audiovox Remote Start Device. It is the responsibility of the installing technician to complete these tests. Failure to test the unit in the following manner may result in personal injury, property damage, or both.

HOOD PIN SAFETY SHUT DOWN:

The intention of the hood pin safety shut down is to prevent the Remote Start unit from being activated while a mechanic or vehicle owner is performing normal routine vehicle maintenance.

To test the integrity of this circuit:

1. With the drivers window in the down position, start the vehicle using the RF transmitter.
2. Reach inside the car and pull the hood release.
3. Raise the hood and confirm that the remote start unit shuts down.

If the unit fails this test, recheck your pin switch connection to the Gray/Black wire of the Audiovox Remote Start Unit.

WARNING! DO NOT RELEASE THIS VEHICLE TO THE CONSUMER UNTIL YOU CONFIRM THE OPERATION OF THE HOOD PIN SAFETY SHUT DOWN FEATURE.

MANUAL SHUT DOWN / ENABLE CIRCUIT:

The intent of the manual shut down / enable circuit is to allow the vehicle operator to prevent operation of the Remote Start Unit regardless of the RF transmitter operation.

1) With the system disarmed/unlocked, and the ignition switch off Press and Hold the pushbutton switch located on the receiver unit on.
2) Turn the ignition switch on, off, on, off, on, off.
3) The LED begins to flash two short flashes followed by one long flashes and continues this pattern until returned to normal mode of operation.

This puts the unit into the R/S Override mode indicating that the remote start is in the service mode and will not start from RF or any other input Posse or otherwise.

To Exit R/S Override Mode
1) With the system disarmed, Press and Hold the pushbutton switch located on the receiver unit on.
2) Turn the ignition switch on, off, on, off, on, off.
3) The LED turns off indicating that the R/S unit is fully functional one again.

WARNING!DO NOT RELEASE THIS VEHICLE TO THE CONSUMER UNTIL YOU CONFIRM THE OPERATION OF THE MANUAL SHUT DOWN / ENABLE FEATURE.

NEUTRAL START SAFETY TEST:

The intent of the neutral start switch is to prevent the vehicle from starting while the gear selector is in any position other than Park, or Neutral. When installing a Remote Start Device, it is imperative that the Yellow Starter wire be connected to the ignition switch side of the Neutral Start Switch. Consideration for the placement of a starter inhibit relay is important as well and should be connected to the ignition switch side of the Yellow Start Wire.

To test the integrity of the Neutral Start Safety Circuit:

1. Set the vehicle parking brake.
2. Block the drive wheels to prevent vehicle movement.
3. Temporarily disconnect the Brown/Black positive shut down wire from the vehicle's brake switch.
4. Sitting in the vehicle, start the engine using the vehicle's ignition key.
5. Step on the brake pedal and shift the gear selector into reverse.
6. Allow the transmission to shift. When you feel the engine pull, do not move the gear selector just turn the ignition switch off. DO NOT attempt to remove the key.
7. Keeping the brake pedal depressed, activate the RF transmitter in an attempt to start the vehicle. The car should not start.
8. Repeat the above test this time move the gear selector to the drive position. If the unit attempts to start, failing this test, recheck your Yellow Wire's connection. This wire must be connected to the ignition switch side of the Neutral Start Switch. If the vehicle you are working on does not have an Electrical Neutral Safety Switch, it will be necessary to reconfigure the Remote Starts Wiring to accommodate this vehicle. The information concerning the Mechanical Neutral Safety Switch provided below will help you to determine if the vehicle you are working on has this type of safety switch and will provide alternate wiring methods to accommodate this situation.

MECHANICAL NEUTRAL SAFETY SWITCH CONSIDERATIONS:

Mechanical neutral safety switch configurations differ slightly in that they do not offer the same level of safety when installing a remote start device. Often when the ignition switch is turned off while the gear selector is in any position other than park or neutral, the mechanical function will not allow the key to be turned to the start position or be removed from the ignition cylinder. This configuration prevents mechanical operation while the vehicle is in gear but offers no consideration for electrical operation. Because of this potential problem, this installation requires the additional connection of a safety wire from the remote start device to the vehicle Park/Neutral ECM Input or the vehicle key in sensor. This connection will prevent remote start operation if the key is left in the ignition switch regardless of the gear selectors position.

CAUTION!
REMEMBER TO RECONNECT THE BROWN/BLACK WIRE TEMPORARILY DISCONNECTED IN STEP 3

DO NOT RELEASE THIS VEHICLE TO THE CONSUMER UNTIL YOU CONFIRM THE OPERATION OF THE NEUTRAL SAFETY START FEATURE.

KEY IN SENSOR CIRCUITS:

If the vehicle you are working on does not have or you cannot locate the ECM reference wire, there are two alternatives available. Although not preferred, the vehicle Key In Sensor may be reconfigured to allow a margin of safety and will prevent the vehicle with a Mechanical Neutral Start Switch from starting in gear.

AUDIOVOX ADVISES THAT YOU MAINTAIN THE FACTORY CIRCUIT WHENEVER POSSIBLE. The following two circuits may be used only if the above circuit is not available.

NOTE: When completing an installation using either of the following key in sensor circuits, if the operator inserts the ignition key while the vehicle is running under the control of the Remote Start, the vehicle will shut down. This must be explained to the operator as it is in contrast to the normal operation of a vehicle utilizing an electrical neutral start switch and is inconsistent with the operators manual. Additional information concerning Key In Sensor methods 1 & 2 are listed below and should be reviewed before considering either alternative.

Method 1 will allow the safety required for the remote start unit and prevent the vehicle from starting while in any gear other than Park or Neutral while the key is in the ignition cylinder however, if the key is left in the ignition switch and the door is left opened, the added relay will be energized causing a 150mA drain on the battery.

Method 2 will allow the safety required for the remote start unit and prevent the vehicle from starting while in any gear other than Park or Neutral while the key is in the ignition cylinder however, the original factory key in chime module will not alert the owner that the key has been left in the ignition switch. In addition, this may also effect other warning tones such as the light on reminder.

These situations should be carefully considered before altering the vehicle's wiring and must be fully explained to the consumer.

METHOD 1

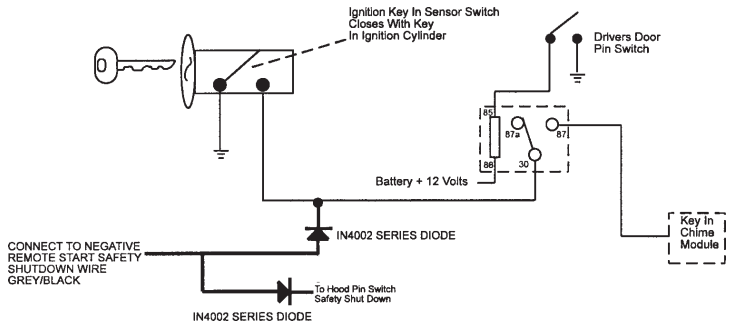

To connect to the key in sensor as shown in method 1:

A. Locate the control wire that connects the drivers door pin switch to the key in sensor switch.
B. Cut this wire and connect the ignition cylinder side to chassis ground.
C. Locate the key in sensor switch wire that connects the chime module to the ignition cylinder .
D. Cut this wire and connect the ignition cylinder side to terminal 30 of a P&B VF45F11 or equivalent relay.
E. Connect the cathode (striped) side of a 4002 series diode to this same wire, and connect the (non striped) side to the negative shut down safety wire (Gray / Black) of the Audiovox Remote Start Unit.
F. Connect terminal 86 of the relay to a fused +12 volt constant battery source.
G. Connect terminal 87 of the relay to the Chime Module side of the previously cut wire in step D.
H. Connect terminal 85 of the relay to the Drivers Door side of the pin switch wire previously cut in step B.

NOTE: A second 4002 series diode may be required to maintain the integrity of the hood open, shut down circuit. If this is the case, it must be installed as shown in the diagram above. The anode (Non Striped) side must be connected to the Gray/Black wire of the Remote Start Unit. The cathode (Striped) side must be connected to the hood pin switch. If the hood pin switch is also used for an alarm trigger input, be certain to use the dual diode set up shown earlier in this manual.

METHOD 2

To connect to the key in sensor circuit as shown for method 2:
A. Locate the control wire that connects the drivers door pin switch to the key in sensor switch.
B. Cut this wire and connect the ignition cylinder side to chassis ground.
C. Locate the key in sensor switch wire that connects the chime module to the ignition cylinder .
D. Cut this wire and connect the ignition cylinder side to the Remote Start Negative Safety Shut down Wire Gray/Black, using a 4002 series diode as shown above.
NOTE: A second 4002 series diode may be required to maintain the integrity of the hood open, shut down circuit. If this is the case, it must be installed as shown in the diagram above. The anode (Non Striped) side must be connected to the Gray/Black wire of the Remote Start Unit. The cathode (Striped) side must be connected to the hood pin switch. IIf the hood pin switch is also used for an alarm trigger input, be certain to use the dual diode set up shown earlier in this manual.

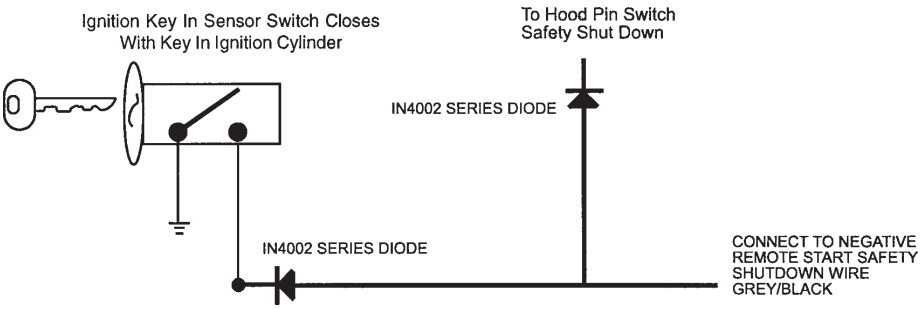

WARNING! AFTER THE CONNECTION OF THE NEUTRAL START SAFETY WIRE AS INDICATED IN ANY OF THE PREVIOUS ALTERNATE CONFIGURATIONS, THIS CIRCUIT MUST BE TESTED FOR OPERATION.
Retest by following the steps outlined in the NEUTRAL START SAFETY TEST shown in this manual.

4 PIN IN VEHICLE DATA BUS PORT (IDB Port)
The 4 pin port located on the side of this module is for proprietary Audiovox data bus interface modules. These modules are used to access a variety of features in the vehicle which can be as simple as door trigger inputs, to more complex door locks outputs, or transponder interfaces for remote starting. **CAUTION!** DO NOT connect anything to this port other than the Audiovox IDB modules or damage to the Remote Start module will occur. All installation instructions for the IDB modules will be packaged with the individual component along with the proper 4 pin wiring harness requires to access the data transmit and receive as well as the proper voltage levels for the interface.

COMPLETING THE INSTALLATION:

After you have confirmed the operation of the Audiovox Remote Start unit and tested all the safety features of the system:

NOTE: This unit has the ability to learn the dome light delay time, up to 60 seconds. If the vehicle has delay interior lights, and you wish to avoid three chirp, defect zone, indication normally associated with this type of interior light, we suggest you learn the interior light delay.
To learn the light delay, start with all doors closed:
(1) Use the transmitter to Lock / Unlock / Lock / Unlock / Lock / Unlock / Lock, the system.
The LED turns on solid to confirm the system entered the learn mode.
(2) Immediately open and close the door of the vehicle to initiate the dome delay.
The unit will monitor the door trigger input Positive, (Purple), and Negative, (Brown) when active.
When the dome light turns off, the unit will add 2 seconds then exit the learn mode.
(3) The LED will begin flashing the Armed indication indicating the unit has exited the learn mode and is armed.

1. Mount the control module up and behind the dash securing it in place with cable ties or screws. Be certain that the chosen mounting location will not inhibit any of the controls of the vehicle.
2. Securely harness and tie all wiring up and away from all hot and moving parts that they may come in contact with under the dash board or in the engine compartment areas.

CAUTION: Particularly avoid the area around the steering shaft and column, as wires can wrap around these mechanisms and impair the safe operation of the vehicle.

3. Apply the Caution Labels supplied with this kit to a conspicuous area in the engine compartment. Make sure to clean the surface before affixing the label.
4. Check the vehicle's wipers, lights, horn, etc.... to insure proper operation.
5. Replace all panels that were removed during installation, and retest the system.
6. Explain all activated features and safety systems associated with the Remote Start Unit installed. Also point out the location of the Push-Button LED Override/Valet switch to the customer and explain it's operation.

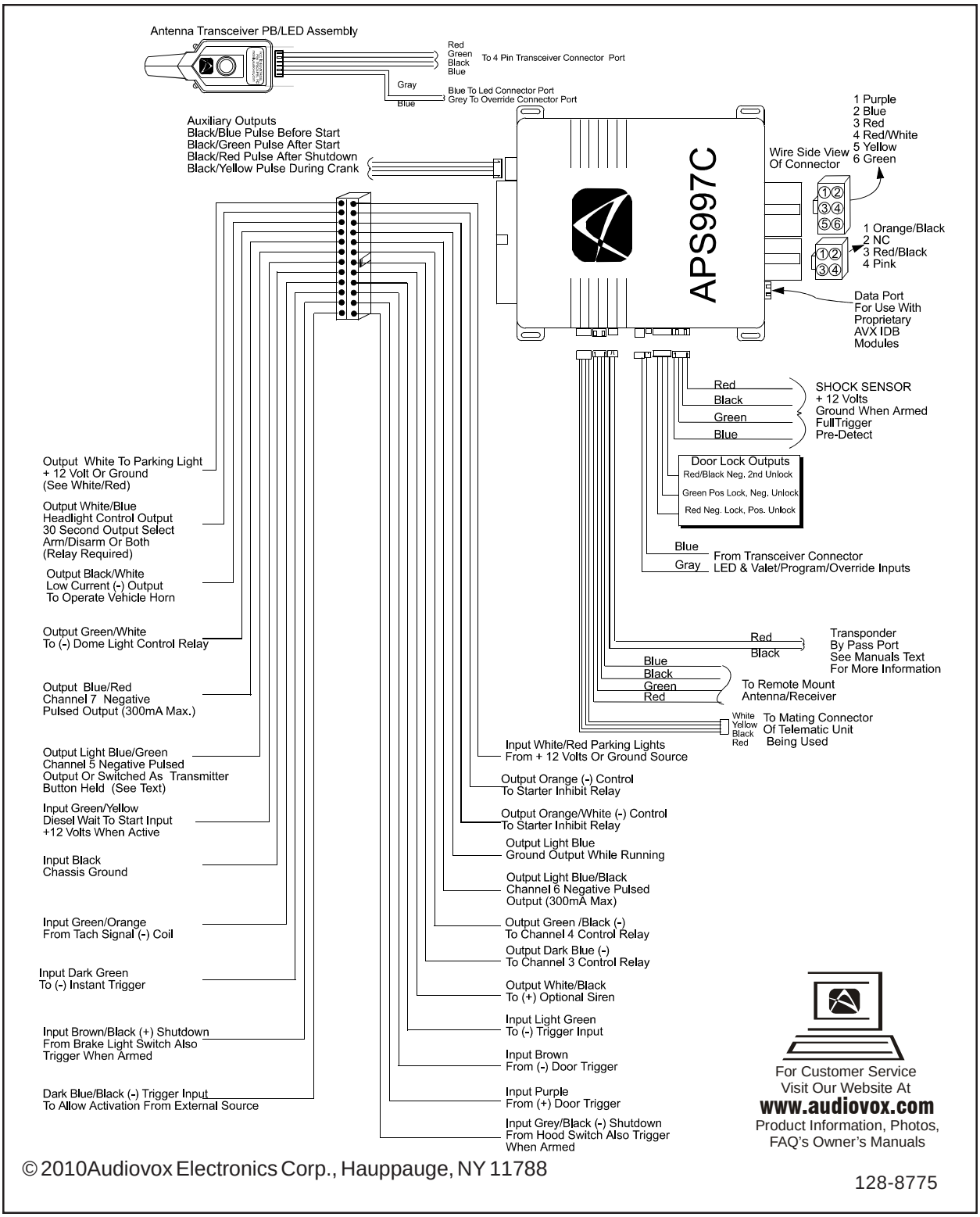

© 2010Audiovox Electronics Corp., Hauppauge, NY 11788

128-8775